MERCURY (4 H.P. (4-STROKE))
Serial Nbr Range: 0R000001 THRU 0R067089 (USA)

Fuel System

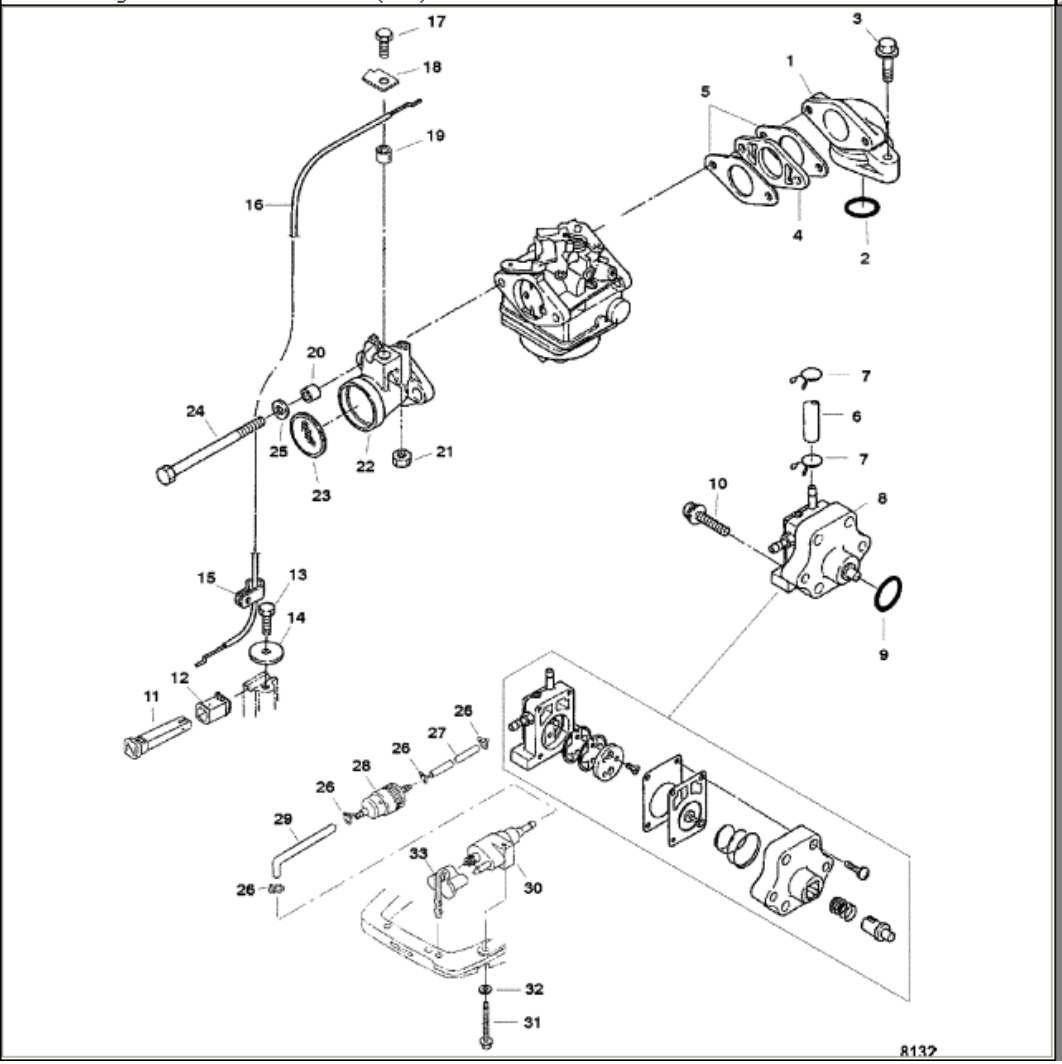

Parts List

Ref	Class	Part	Description	Qty	Comment	Footnote
1		803530	INLET MANIFOLD	1		
2	25	803513 3	O-RING	1		2
3	10	815068 4	BOLT, (M6 x 25)	2		
4	27	803508 10	INSULATOR GASKET	1		
5	27	803508 5	GASKET	2		2
6	32	95394 9	FUEL LINE	1	(To Carburetor)	
7	54	95395	CLIP	1		
8		803529T 1	FUEL PUMP	1	SN# 0R036271 & Below	
8		803529T02	FUEL PUMP	1	SN# 0R036272 & Up	
9	25	803513	O-RING	1		
10	10	855544 8	SCREW, (M6 x 25)	2		
11		804646	CHOKE ROD	1		
12	23	804647	BUSHING	1		
13	10	16223	BOLT, (M6 x 14)	1		
14	12	16140 4	WASHER	1		
15	54	95395 1	CLAMP	1		
16		827622 5	CHOKE LINK WIRE	1		
17	10	16832	BOLT, (M6 x 16)	1		
18		803528	BRACKET	1		
19	23	804371	COLLAR	1		
20	23	95286 8	COLLAR	2		
21	11	40021 2	NUT, (M6)	1		
22		803526T	AIR SILENCER	1		
23		803527	FLAME TRAP	1		
24	10	16329	BOLT, (M6 X 85 MM)	2		
25	12	16826	WASHER	2		
26	54	95395	CLIP	4		
27	32	878054 1	TUBING	1		
28	35	16248	FILTER, Fuel	1		
29	32	878054	TUBING	1		
30	22	15781A 5	FUEL CONNECTOR	1		
31	10	40003 33	SCREW, (M6 x 40)	1		
32	12	16826	WASHER	1		
33		878311	CAP	1		
-	27	803508A99	GASKET SET	1	SN# 0R057258 & Below	
-	27	803508A05	GASKET SET	1	SN# 0R057259 & Up	